TEMPOMATIC electronic basin tap

Ref. 441200

Mains supply

2026 UK public price excluding VAT: £438.21

DESCRIPTION

TEMPOMATIC electronic basin tap - Ref. 441200

Cross wall electronic basin tap:
Independent IP44 electronic control unit.
230/12V mains supply with transformer.
Flow rate pre-set at 3 lpm at 3 bar, can be adjusted from 1.4 to 6 lpm.
Scale-resistant flow straightener.
Adjustable duty flush (pre-set flush ~60 seconds every 24 hours after last use).
Chrome-plated fixed spout L. 170mm with anti-rotating pin and back-nut.
Escutcheon flush to the wall.
Shockproof infrared presence detection sensor.
Anti-blocking security.
For walls ≤ 165mm.
Solenoid valve M 3/8" with integrated filter.
Threaded rods can be cut to size.
Suitable for People with Reduced Mobility.
30-year warranty.

ADVANTAGES

- 90% water savings
- Total hygiene: no manual contact
- Cross wall installation
- LED diagnostic aid

TECHNICAL CHARACTERISTICS

TEMPOMATIC electronic basin tap - Ref. 441200
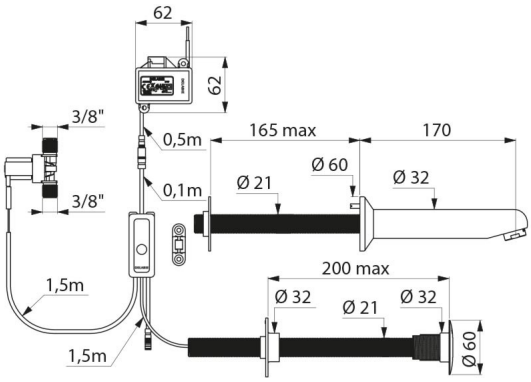
Supply	230/12V mains supply
Connector	M3/8"
Technology	Electronic
Depth	165mm
Spout length	170mm
Flow rate	3 lpm
Warranty	30 YEAR WARRANTY