Recessed waterproof housing for TEMPOFLUX 3 WC

Ref. 763BOX

For WC time flow valve - Kit 1/2

2026 UK public price excluding VAT: £154.64

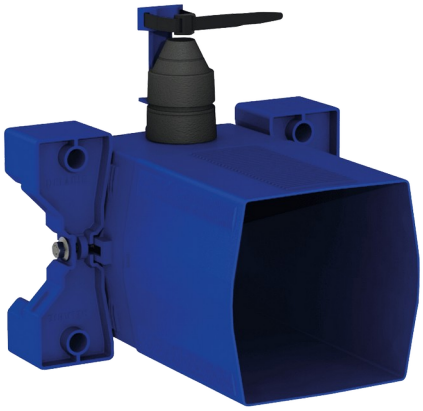

DESCRIPTION

Recessed waterproof housing for TEMPOFLUX 3 WC - Ref. 763BOX

Recessed waterproof housing, kit 1/2:
Flush system without cistern: directly connected to pipework.
Compatible with WC time flow valve.
Collar with waterproof seal.
Hydraulic connection to the outside and maintenance from the front.
Adjusts to all types of installation (rails, solid walls, panels).
Compatible with wall finishes from 10 - 120mm (while maintaining the minimum recessing depth of 93mm).
Suitable for standard or "pipe-in-pipe" supply.
Stopcock and flow rate adjustment, activation unit and cartridge are all integrated and accessible from the front.
Back flow prevention device inside the housing.
Secure system flush without sensitive elements.
Outlet connection for PVC tube Ø 26/32mm.
30-year warranty.
Order with control plate references 763000, 763040, 763041 or 763030.

ADVANTAGES

- Recessed installation is easy
- 100% waterproof housing
- Adapt to wall thickness

TECHNICAL CHARACTERISTICS

Recessed waterproof housing for TEMPOFLUX 3 WC - Ref. 763BOX
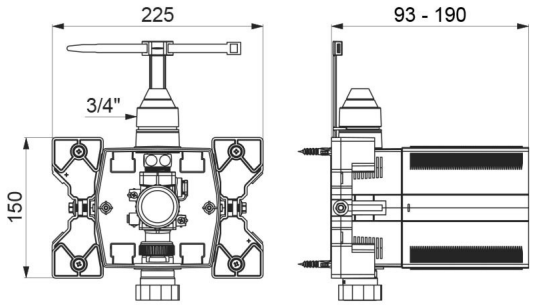
Connector	F¾"
Technology	Time flow
Height	150mm
Depth	93 to 190mm
Width	225mm
Norms	WRAS
Warranty	30 YEAR WARRANTY