TEMPOSTOP time flow tap 2 controls

Ref. 748210

Anti-blocking version (AB)

DESCRIPTION

TEMPOSTOP time flow tap 2 controls - Ref. 748210

Time flow basin tap for cross wall installation:
Time flow ~7 seconds.
Flow rate pre-set at 3 lpm at 3 bar, can be adjusted from 1.4 to 6 lpm.
2 controls: 1 button for mixed water and 1 button for cold water.
Tamperproof scale-resistant flow straightener.
Chrome-plated solid brass body M½".
Control ≤ 200mm, spout ≤ 230mm.
Ligature-resistant button is flush to wall.
Anti-rotating pin and back nut.
AB anti-blocking system: water will flow only when the push-button is released.
30-year warranty.

ADVANTAGES

- Cross wall installation
- Anti-blocking system
- 85% water savings
- Maintenance outside area of use

TECHNICAL CHARACTERISTICS

TEMPOSTOP time flow tap 2 controls - Ref. 748210
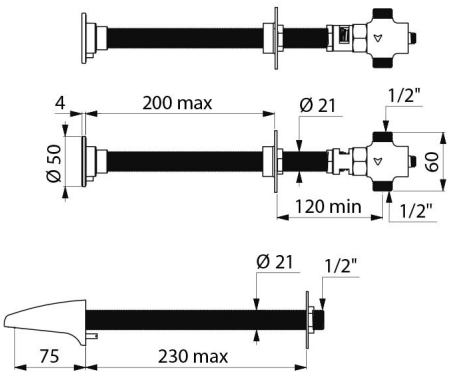
Connector	M½"
Technology	Time flow
Length	200mm
Spout length	75mm
Flow rate	3 lpm
Norms	ACS
Warranty	30 YEAR WARRANTY