Mechanical mixer for sinks or troughs

Ref. 2510

Single hole mechanical mixer with swivelling spout H. 155mm L. 230mm



DESCRIPTION

Mechanical mixer for sinks or troughs - Ref. 2510

Deck-mounted mechanical sink mixer.
Single hole mixer with swivelling spout H. 155mm L. 230mm fitted with hygienic flow straightener.
Spout suitable for fitting a BIOFIL point-of-use filter.
Ø 40mm standard ceramic cartridge with pre-set maximum temperature limiter.
Body and spout with smooth interiors.
No risk of cross flow between the hot and cold water.
No non-return valves on the inlets.
Body and spout made from chrome-plated brass.
Flow limited to 9 lpm at 3 bar.
Sculptured control lever.
Supplied with PEX flexibles F3/8".
Fixing reinforced by 2 stainless steel rods.
Mechanical mixer ideal for healthcare facilities, retirement and care homes, hospitals and clinics.
Single hole mixer suitable for people with reduced mobility.
Mixer with 30-year warranty.

ADVANTAGES

- Hygiene: smooth interior reduces bacteria
- Pre-set maximum temperature limiter
- Ergonomic sculptured control lever is easy to grip
- Comfort: optimum drop height and spout projection

TECHNICAL CHARACTERISTICS

Mechanical mixer for sinks or troughs - Ref. 2510

Connector	F3/8"
Height	178mm
Drop height	155mm
Spout length	230mm
Flow rate	9 lpm at 3 bar
Temperature limiter	Yes
Finish	Chrome-plated brass
Norms	ACS, NF, WRAS, BS
Warranty	30 YEAR WARRANTY
Repairability	50 YEARS REPAIRABILITY

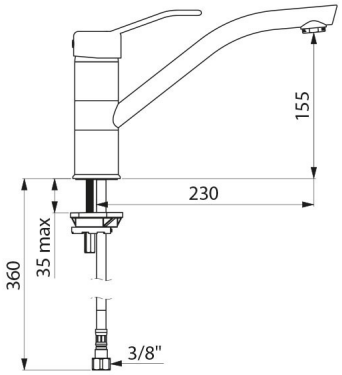

© DELABIE