Shower riser rail with EP mechanical mixer

Ref. 2539EPSKIT

Shower riser rail with pressure-balancing mixer

DESCRIPTION

Shower riser rail with EP mechanical mixer - Ref. 2539EPSKIT

Shower riser rail with single control mechanical mixer.
• Wall-mounted shower kit with EP shower mixer.
Ø 40mm ceramic cartridge with pressure-balancing (EP) and pre-set maximum temperature limiter.
Total anti-scalding safety: HW flow rate is reduced if CW supply fails (and vice versa).
Constant temperature regardless of pressure or flow rate variations.
Flow rate regulated at 9 lpm.
Chrome-plated brass body.
Sculptured control lever.
M½" shower outlet with integrated non-return valve.
Mixer with 2 offset standard wall connectors M1/2" M3/4".
Filters and non-return valves.
• Sliding shower head (ref. 813) on a chrome-plated riser rail (ref. 821) with soap dish and flexible hose (ref. 834T1).
• Shower hose retaining collar (ref. 830).
Shower and riser rail ideal for healthcare facilities, nursing home, hospitals and clinics.
Suitable for people with reduced mobility.
30-year warranty.

ADVANTAGES

- HW flow rate reduced if CW fails
- Pressure-balancing: constant temperature
- Ergonomic: sculptured lever is easy to grip
- Water saving: flow rate regulated at 9 lpm

TECHNICAL CHARACTERISTICS

Shower riser rail with EP mechanical mixer - Ref. 2539EPSKIT
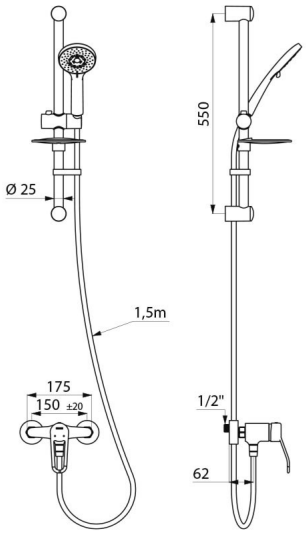
Connector	M1/2"
Technology	SECURITHERM EP
Width	175mm
Flow rate	9 lpm
Temperature limiter	39°C
Finish	Chrome-plated brass
Norms	ACS, BELGAQUA
Warranty	30 YEAR WARRANTY
Repairability	50 YEARS REPAIRABILITY