Be-line® L-shaped grab bar, anthracite, H. 750mm

Ref. 511970C

Metallised anthracite powder-coated aluminium

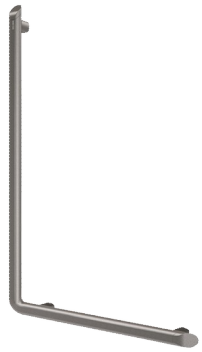

DESCRIPTION

Be-line® L-shaped grab bar, anthracite, H. 750mm - Ref. 511970C

Be-line® L-shaped grab bar for showers or baths, for people with reduced mobility.
Helps the user stand and move safely in the shower or bath.
Use as a shower rail by adding a shower head holder and/or soap dish.
Aluminium tube thickness 3mm. Solid aluminium fixing points.
Rounded profile Ø 35mm with ergonomic flat front face that prevents rotation for an optimal grip.
Metallised anthracite powder-coated finish provides a good visual contrast with light-coloured walls.
Uniform surface for easy maintenance and hygiene.
38mm gap between the bar and the wall: minimal space prevents the forearm passing between the bar and the wall, reducing the risk of fracture in case of loss of balance.
Concealed fixings.
Supplied with stainless steel screws Ø 8 x 70mm for concrete walls.
Dimensions: 750 x 450mm.
Tested to over 200kg. Maximum recommended user weight: 135kg.
30-year warranty. CE marked.

ADVANTAGES

- Innovative design suitable for all users
- Comfort: ergonomic anti-rotation surface
- Tested to over 200kg
- 38mm gap between bar and wall: space saving

TECHNICAL CHARACTERISTICS

Be-line® L-shaped grab bar, anthracite, H. 750mm - Ref. 511970C
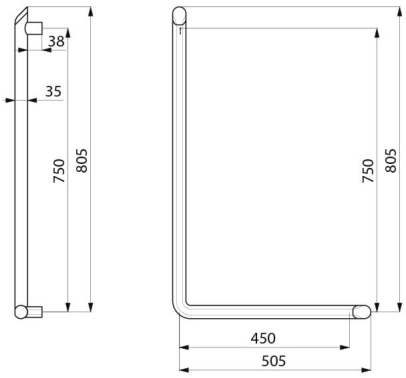
Height	750mm
Length	450mm
Diameter	Ø 35mm
Width to the wall	38mm
Thickness	3mm
Finish	Metallised anthracite epoxy coated aluminium
Norms	CE
Warranty	30 YEAR WARRANTY
Repairability	50 YEARS REPAIRABILITY