Be-line® lift-up shower seat with leg

Ref. 511930C

Wall-mounted removable lift-up shower seat

DESCRIPTION

Be-line® lift-up shower seat with leg - Ref. 511930C

Be-line® removable lift-up shower seat.
Shower seat for disabled people or for people with reduced mobility.
Large, designer model.
Removable: easy to remove with anti-theft locking system. Reduces the number of shower seats in a facility, allowing installation only when required e.g. hotels or hospitals providing short-term accommodation for people with reduced mobility.
Retained in upright position. Slowed down descent.
Suitable for intensive use in public places or the healthcare sector.
Solid seat made from high strength polymer.
Non-slip surface.
Anti-bacterial treatment: optimal protection against bacterial development.
Good resistance to Betadine®.
Reinforced by a central, hinged leg which folds automatically.
Metallised anthracite finish provides a good visual contrast with a light coloured wall.
5 concealed fixing points.
Supplied with stainless steel screws Ø 8 x 70mm for concrete walls.
Dimensions: 443 x 450 x 480mm.
Folded dimensions: 87 x 541mm.
Tested to over 200kg. Maximum recommended user weight: 135kg.
Wall-mounted lift-up shower seat with 30-year warranty. CE marked.

ADVANTAGES

- Designer shower seat
- Can be swapped for a shelf: suitable for all users
- Comfort: large, ergonomic seat
- Tested to over 200kg

TECHNICAL CHARACTERISTICS

Be-line® lift-up shower seat with leg - Ref. 511930C
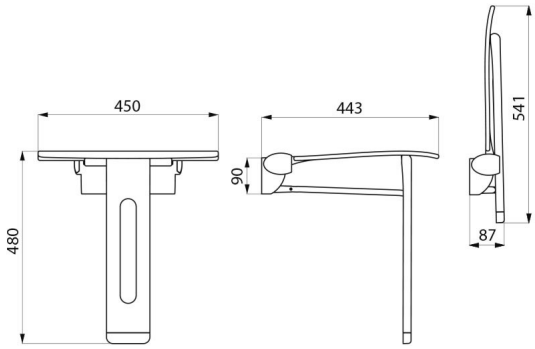
Height	480mm
Depth	443mm
Width	450mm
Finish	Metallised anthracite
Norms	CE, PEFC, FDES verified Inies
Warranty	30 YEAR WARRANTY