SECURITHERM Securitouch thermostatic shower mixer

Ref. H9769

Thermostatic shower mixer with no non-return valves

DESCRIPTION

SECURITHERM Securitouch thermostatic shower mixer - Ref. H9769

SECURITHERM dual control thermostatic shower mixer.
Thermostatic mixer with no non-return valves on the inlets (reduced bacterial proliferation).
No risk of cross flow between hot and cold water.
Mixer with anti-scalding failsafe: shuts off automatically if cold supply fails.
Prevents cold showers: shuts off automatically if hot water supply fails.
Securitouch thermal insulation prevents burns.
Scale-resistant thermostatic cartridge for temperature adjustment.
¼-turn ceramic head for flow rate adjustment.
Temperature control up to 43°C.
Double temperature limiter: 1st limiter set at 41°C, 2nd limiter set at 43°C.
Thermal shocks are possible without removing the control knob or shutting off the cold water supply.
Flow rate limited to 9 lpm at 3 bar.
Ergonomic controls.
M½" shower outlet.
F¾" inlets with integrated filters.
Mixer supplied with offset STOP/CHECK wall connectors M½" M¾".
Mixer ideal for healthcare facilities, retirement and care homes, hospitals and clinics.
Mixer suitable for people with reduced mobility.
Shower mixer with 30-year warranty.

ADVANTAGES

- SECURITHERM: Anti-scalding safety
- Maximum hygiene: no non-return valves
- Securitouch thermal insulation prevents burns
- Thermostatic: total temperature stability

TECHNICAL CHARACTERISTICS

SECURITHERM Securitouch thermostatic shower mixer - Ref. H9769
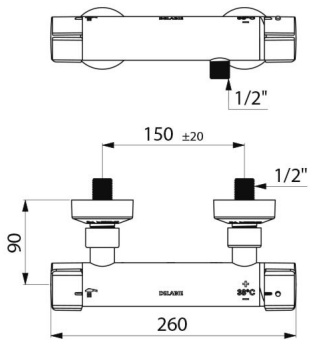
Connector	M1/2"
Technology	SECURITHERM Securitouch thermostatic mixer, no-non-return valves
Depth	95 mm
Length	260mm
Flow rate	9 lpm at 3 bar
Temperature limiter	Yes
Finish	Chrome-plated brass
Norms	ACS NF kiwa
Warranty	30 YEAR WARRANTY