Pre-rinse set with mixer

Ref. 5630

Without bib tap

DESCRIPTION

Pre-rinse set with mixer - Ref. 5630

Complete pre-rinse set without bib tap suitable for intensive use in professional kitchens.
Deck-mounted single hole mixer with:
- valve heads with reinforced mechanisms and ergonomic control levers.
- F3/8" flexibles and non-return valves.
- reinforced fixing via 2 threaded rods with back-nuts.
Black hand spray with adjustable jet and 9 lpm flow rate at the outlet (ref. 433010).
Scale-resistant hand spray with shock-resistant tip.
Black, reinforced, food-grade flexible hose L. 0.95m.
3/4" stainless steel column.
Adjustable wall bracket.
Stainless steel spring guide.
Pre-rinse set with 30-year warranty.

ADVANTAGES

- Anti-torsion rotating nuts and PVC sheath
- Comfort: ergonomic controls
- Hygiene: PVC flexible, scale-resistant spray
- Increased resistance: high quality flexible

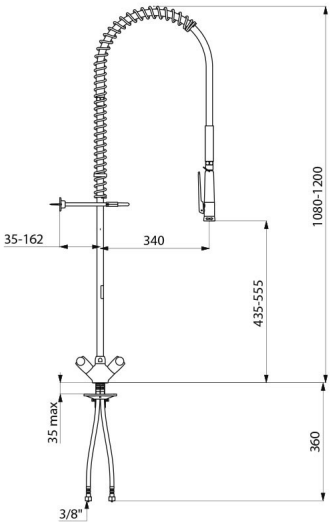

TECHNICAL CHARACTERISTICS

Pre-rinse set with mixer - Ref. 5630

Connector	F3/8"
Height	1080 - 1200mm
Drop height	435-555mm
Flow rate	9 lpm via the hand spray
Width to the wall	35 - 162mm
Finish	Stainless steel
Norms	BELGAQUA, ACS
Warranty	30 YEAR WARRANTY
Repairability	50 YEARS REPAIRABILITY